Model 49 Overfill Protection Valve

Installation Instructions

Approved for use in both pressure and gravity fill applications.

UST / AST Tanks

(MH21139)



Universal Valve Company, INC.
478 Schiller St – Elizabeth, NJ 07206
800-223-0741
www.universalvalve.com

Rev 9-30-25

Installation Instructions

IMPORTANT INFORMATION FOLLOW ALL INSTRUCTIONS

The overfill prevention devices shall only be assembled and installed by a qualified person and the use of non-qualified personnel, or any deviations from these recommended procedures, could result in damage or malfunction. Please call 800-223-0741 for technical assistance for qualified persons.

Model 49-02 – Overfill Prevention Device. Max 36.5 psi and 200 gpm flow rating.

Model 49-02 is intended for use with storage tanks or fueling systems containing automotive fuels under the expected use conditions and exposures that have similar chemical, physical and material compatibility properties as represented in these requirements. Typically those liquids identified in US Code of Federal Regulations 40 CFR Part 80 “Regulation of Fuels and Fuel Additives” or fuels regulations made under sections 140 or 145 of the Canadian Environmental Protection Act, 1999 (CEPA, 1999), and compliant with only the Fuel Specifications below that are dispensed in commercial or fleet motor vehicle fueling stations for use in automotive engines (internal combustion or compression ignition):

1) ASTM D4814, Standard Specification for Automotive Spark-Ignition Engine Fuel, or CAN/CGSB-3.511, Oxygenated Automotive Gasoline Containing Ethanol (E1-E10): AKA gasoline, gasohol, oxygenated gas, or low blend ethanol (maximum E10)

2) ASTM D5798, Standard Specification for Ethanol Fuel Blends for Flexible-Fuel Automotive Spark-Ignition Engines, or CAN/CGSB-3.512, Automotive ethanol fuel (E50-E85): AKA high blend ethanol or (E51 – E83)

3) ASTM D975, Standard Specification for Diesel Fuel, or CAN/CGSB 3.517, Diesel Fuel, or CAN/CGSB-3.520, Diesel fuel containing low levels of biodiesel (B1 – B5): AKA on-road diesel, or low blend biodiesel (maximum B5)

4) ASTM D7467, Standard Specification for Diesel Fuel Oils, Biodiesel Blend, or CAN/CGSB-3.522, Diesel Fuel Containing Biodiesel (B6 – B20): AKA mid blend biodiesel (B6 – B20)

5) Mid-Range Ethanol Blends (E11 – E50) using variable mixtures of ASTM D4814 or CAN/CGSB-3.511 Low Blend Ethanol and ASTM D5798 or CAN/CGSB-3.512 High Blend Ethanol.

6) Isobutanol Fuel Blends (maximum iBu16) using variable mixtures of ASTM D4814 or CAN/CGSB-3.511 Gasoline (E0) and ASTM D7862, Standard

Specification for Butanol for Blending with Gasoline for Use as Automotive Spark-Ignition Engine Fuel, (2-methyl-1-propanolisomer).

7) Biodiesel at 97%-100% B99/B100

Products with obvious visible damage shall not be placed into service. Overfill preventers are not intended for extended storage in excessive temperatures, and rough handling (drops, impacts, crushing, dragging, etc.) during transit may cause damage or malfunction during use.

Universal Model 49-02 shall be inspected annually. Inspection includes any physical damage, the float operates freely, and the valve is set to the desired shutoff height (follow the instructions below to determine if the valve is correctly set to the desired shutoff height). Should there be any visual damage or float hang up while moving up and down the valve should be replaced and not returned to service. Should the desired shut off height be incorrect, please follow the instructions to reset the valve to the correct height.

The Model 49 Overfill Protection Valve is designed to prevent the overfill of fuel storage tanks during pressurized and gravity product drops. (UL approved MH21139). The valve operates automatically when the product reaches a predetermined level and gradually slows flow down to allow the operator time to shut the product drop off. After the product drop has been shut off, the remaining fluid in the line is drained automatically into the tank by means of a bleed hole. For safety, it is recommended that the valve be used in conjunction with a Spill Containment Manhole. *Tight Fill adapters are included with this system and are to be used in conjunction with tight fill nozzles only. Do not remove pin in adapter or remove adapter to nozzle fill without tight seal or overspill will occur*.

Important Note *Prior to installation read these instructions completely. Check to make sure all parts are included. Do not substitute parts for those provided, unless specified. Failure to properly follow these instructions may result in improper operation of the valve. DO NOT INSTALL IF THERE IS ANY VISIBLE DAMAGE TO THE VALVE.*

Parts List	
49-02	**49-03**
Overfill Prevention Valve Assembly	Overfill Prevention Valve Assembly
Adjustable 4" x 2" Reducing Adapter	Adjustable 4" x 2" Reducing Adapter
2" Tight Fill Adapter	3" Tight Fill Adapter
12" long 2" dia. Pipe Nipple	12" long 2" dia. Pipe Nipple

Optional Parts
2" Fill Cap (49-CAP)
3" Fill Cap (49-3CAP)
Drop Tube Connector Adapter (49-DTC)

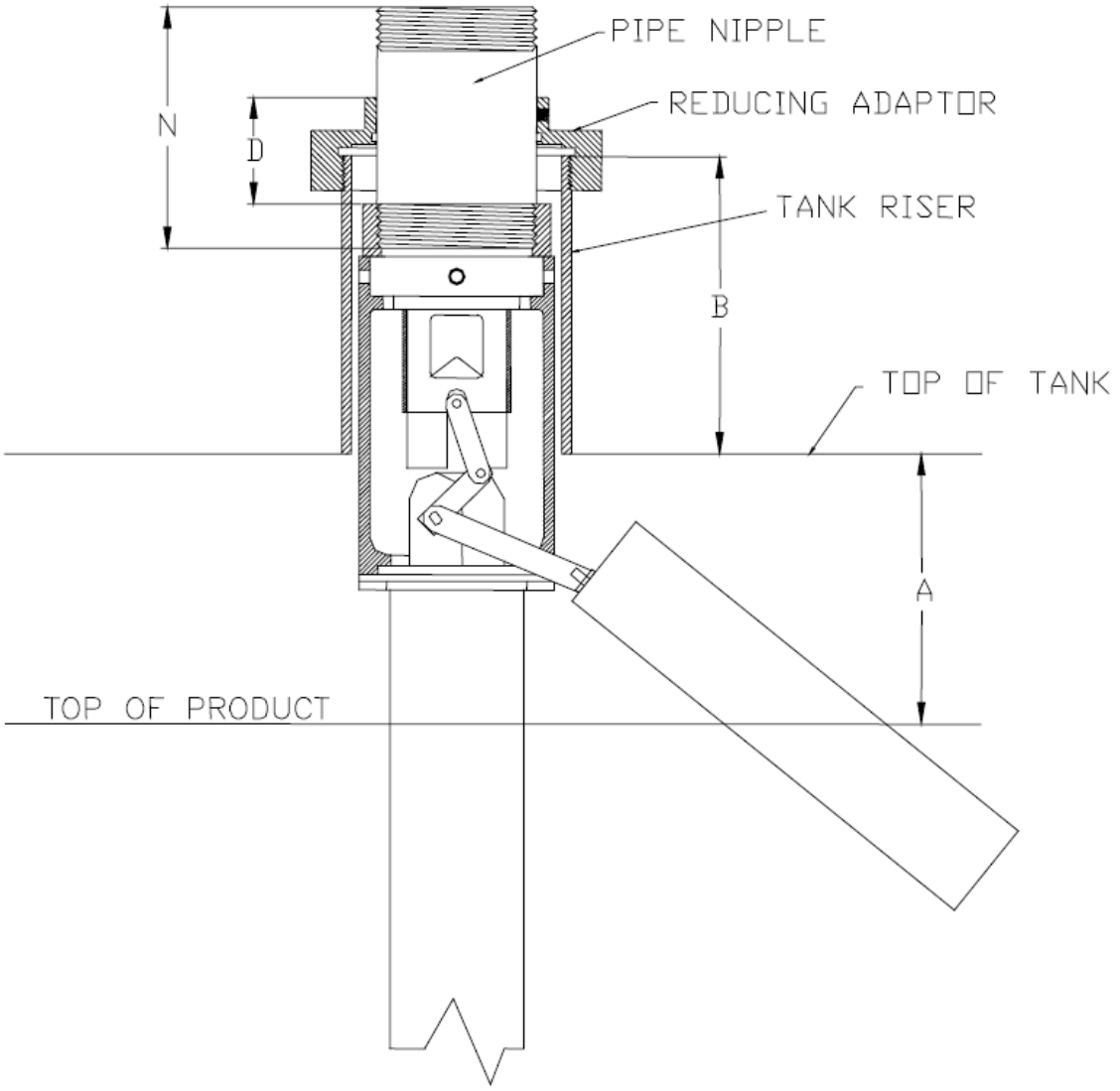

Figure 1 – Model 49 Overfill Prevention Valve
(Shown in Fully Closed Position)

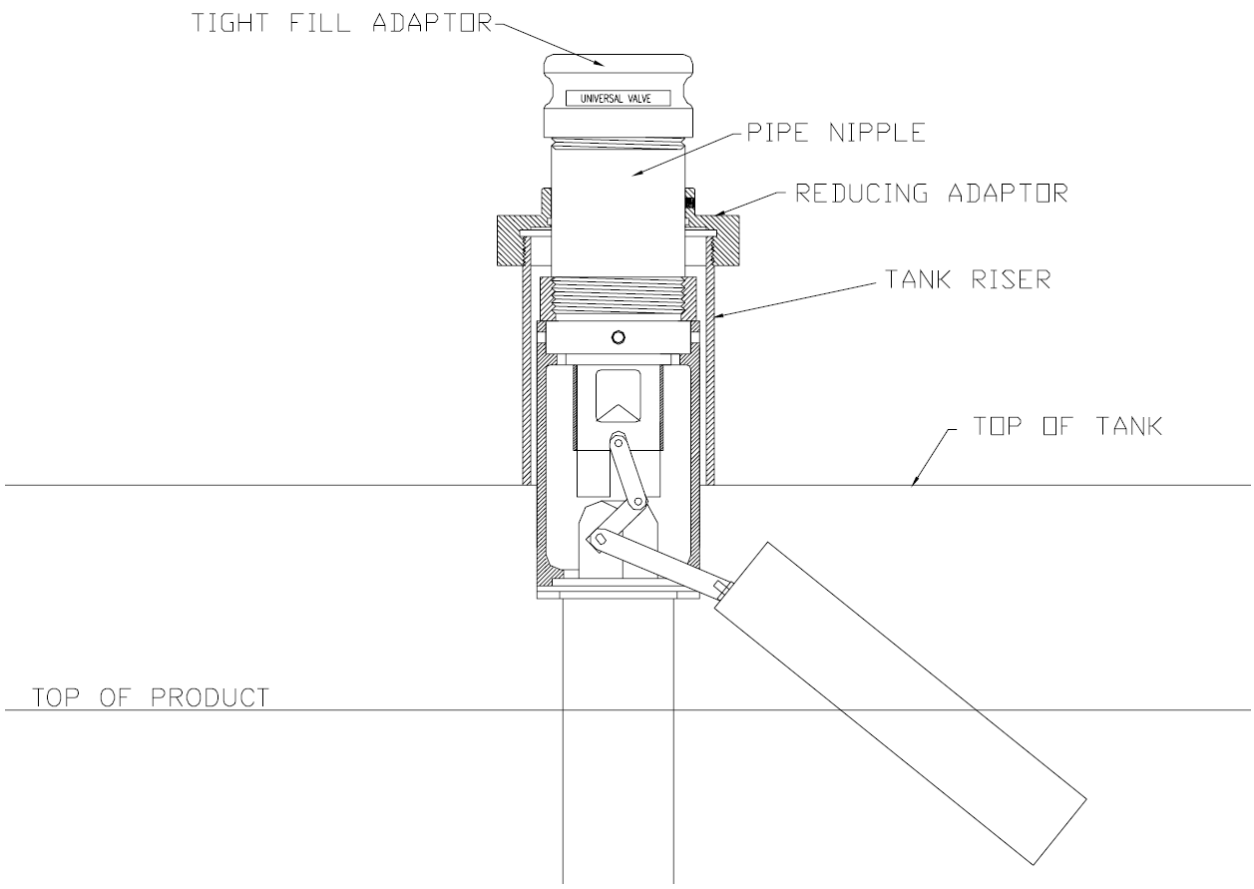

Figure 2 Typical Fuel Storage Tank with Model 49

Model 49 Installation Instructions

1. You must first determine the minimum length for the pipe nipple included with the kit to see if it is adequate for your application. To find the minimum pipe nipple length for the installation of the Model 49 overfill valve determine the following.

2. Determine the riser height, which is the vertical distance from riser pipe lip to top of tank. This will be dimension B as shown in Figure 1.

3. If the valve is to be installed in cylindrical tank, please refer to the manufactures tank chart to determine distance, “A”. Or for approx. measurements you can refer to the shut-off point from the chart below. If the tank is rectangular, then the shut-off point, A is 10% of the height of the tank for 90% shutoff or 5% of the height for 95% shutoff. (Minimum allowable shut off height is 3 ¼”)

Tank Diameter [ft]	“A” Dimension for 95% Shut Off	“A” Dimension for 90% Shut Off
4	4 ¾”	7 ½”
5	6”	9 ½”
6	7”	11 ¼”
7	8 ¼”	13 ¼”
8	9 ½”	15”
9	10 ½”	17”
10	11 ¾”	18 ¾”
11	13”	20 ¾”
12	14”	22 ½”

Values given above are approximate. Exact values can be calculated from the following equations or from the manufactures tank chart:
*For 95% shut off, Distance from top (in inches) = 1.1677 * Diameter of Tank (in feet)*
*For 90% shut off, Distance from top (in inches) = 1.8777 * Diameter of Tank (in feet)*

The minimum pipe nipple length equals (N):

N = A + B - 5-5/8" *The 5-5/8" allows for the body and adaptor offset*

This calculation provides for approximately 1" of the nipple to be above the top of the reducing adaptor and 1" of the nipple to be threaded into the Model 49.

Standard length 2" pipe nipple adjustment calculations

1) The distance from the top of the 49 to the top of the reducing adaptor can be calculated (from Figure 1. length D): D = N - 2"
This distance can be used to adjust the 2" pipe nipple, so the Model 49 is at the correct level in the tank.

2) Screw and tighten the included pipe nipple into the top of the Model 49 and make a mark (D inches) from the top of the Model 49 on the pipe (Figure 1.). This mark will be used to align the pipe until the mark is level with the top of the adaptor.

3) Install the proper length fill pipe (or drop tube, when using optional 49-DTC.) into the bottom of the Model 49 and tighten. *The #49 will not operate if the fill pipe is not installed*

4) Slide the reducing adaptor over the end of the pipe nipple using grease to lubricate the O-ring.

5) Install the fill adaptor onto the top end of the pipe nipple.

6) Place the Model 49 assembly with the fill pipe (or drop tube) attached to the bottom of the Model 49 into the tank through the riser. (Figure 2.)

Care must be taken to be sure that the float is aligned with the centerline of the tank and away from the wall(s) or other obstructions. If the float is not installed so it has free motion the Model 49 will fail to operate and an overfill condition may result. (Figure 2.)

7) Install the reducing adapter onto the riser at the top of the tank. The adapter should be tightened until the gasket seats properly on the top of the riser. *Caution: hold the pipe nipple to prevent the #49 assembly from rotating or falling into the tank.*

8) Adjust the height of the Model 49 to the correct level in the tank as determined from the pipe nipple length calculations, by aligning the mark created in step # 2.

9) To lock the pipe in the reducing adaptor, the 3 set screws must be tightened equally. This positions the pipe in the center of the reducing adaptor for a secure seal between the pipe and the O-ring.